PLANAR-SG3000 Headend

Operating Manual



PLANAR

2012

T A B L E O F C O N T E N T S

INTRODUCTION **6**
1. SAFETY INSTRUCTIONS **6**
2. GENERAL OVERVIEW **6**
2.1 Function 6
2.2 Operating Conditions: 7
2.3 Basic Specifications: 7
2.4 Component Arrangement 7
2.5. Options and Accessories 7
3. PLUG-IN MODULES **8**
3.1. Channel Modules 8
3.1.1 K1, K2 Channel Amplifier Modules 8
3.1.2 KC1, KC2 Converter Modules 9
3.2 1P, 2P, 4P, 8P Input Splitter Modules 10
3.3 A1, A2 Input Amplifier Sub-Module 11
3.4 C1 Central Processor Module 11
4. ASSEMBLY AND MOUNTING **12**
4.1 General Information 12
4.2 Mounting Splitters 12
4.3 Mounting Channel Modules 14
4.4 Mounting Input Amplifiers 15
4.5. Fixing Modules 15
4.6 Mounting Central Processor 16
4.7 Disassembling Modules 17
4.7.1 Removing Channel Modules 17
4.7.2 Removing Input Amplifiers 17
4.7.3 Removing Splitters 17
4.7.4 Removing Central Processor 18
4.8 Headend Installation 18
5. START-UP **18**
5.1 General Information 18
5.1.1 Receiving Low Level Signals 19
5.1.2 Connecting Injectors for Powering Antenna Amplifiers 19
6. PROGRAMMING **20**
6.1 Programmer Controls 20
6.2. Main Menu Items 20
6.2.1. Headend Title 20
6.2.2. Installed Modules 20
6.2.3. Modules Control 21
6.2.4. Level Check 21
6.2.5. Saving Configuration 21
6.3 Viewing Modules Info 21
6.4. Changing Headend Configuration 22
6.5. Modules Control 22
6.5.1 Editing Frequency 23
6.5.2 Editing Channel Number 23
6.5.3 Editing Value of Operating Current 24
6.6. Level Check 24
7. UPDATING FIRMWARE **25**
8. MAINTENANCE **26**
9. STORAGE AND TRANSPORTATION **26**
10. WARRANTY **26**

INTRODUCTION

This Operating Manual represents the design, specifications, overview of functions, and basic operation procedure of PLANAR-SG3000 Headend, to ensure effective and safe use of the technical capabilities of the instrument by the user.

The following abbreviations are used in this Manual:

SAW – Surface Acoustic Wave
AGC – Automatic Gain Control
VHF – Very High Frequency
UHF – Ultra High Frequency
PLL – Phase-Locked Loop
LO – Local Oscillator
HE – Headend

1. SAFETY INSTRUCTIONS

Carefully read through the following safety instructions before putting the Headend into operation. Observe all the precautions and warnings provided in this Manual for all the phases of operation, service, and repair of the Headend.

PLANAR-SG3000 must be used only by skilled and specialized staff or thoroughly trained personnel with the required skills and knowledge of safety precautions.

The headend is under dangerous voltage. Do not operate the headend if it is not properly grounded.

Turn the power off before you replace a module or put a jumper.

Do not operate the headend if the power supply cover is removed.

2. GENERAL OVERVIEW

2.1 Function

PLANAR-SG3000 is used to amplify analog and digital signals and to convert analog signals. It can be unattended and designed for twenty-four-hour operation.

PLANAR-SG3000 Headend converts the receiving channel signal to intermediate frequency (930 MHz). Intermediate frequency filtration is carried out using SAW filters. All these features guarantee high selectivity of channel modules, their compact size and retuning properties. PLANAR-SG3000 can be programmed using PS-24 Programmer or from the computer via RS232-SG24 port (not included in the delivery set, can be purchased additionally).

PLANAR-SG3000 Headend integrates:
- automatic gain control (AGC) in each channel;
- computer control and check (optional);
- low-level signal receiving mode;
- signal level displaying for each channel;
- built-in injectors for powering antenna amplifiers at each input;
- output level control for each channel;
- built-in adjustable attenuator at each input.

2.2 Operating Conditions:

- ambient temperature 0 °C to +50 °C;
- relative air humidity at 25 °C up to 80%;
- atmospheric pressure 86-106 kPa.

2.3 Basic Specifications:

Frequency range, MHz ..... 48-862 (1-69 TV Channels)
Number of channel modules in one base unit, pcs..... up to 20
Number of inputs (depending on configuration), pcs..... 1-20
Input level range, dBμV 70-100
Input tap modules attenuation level, dB 10
Headend output level (with adjustment), dBμV 72-82
Test port output level (with adjustment), dBμV 60-70
Output tap modules attenuation level, dB, max..... 10
AGC depth, dB, min 30
Output level deviation at
-input level deviation of 70-100 dBμV, dB, max..... ±1
Nearest non-adjacent channels selectivity, dB, min 60
Operating frequency response flatness, dB, max 2.0
Noise factor, dB, max..... 7
Max permissible current for powering antenna amplifier, mA, max..... 120
Max permissible total current for powering antenna amplifiers, mA, max 300
Dimensions, mm ..... 425 x 280 x 70
Supply voltage, V..... 220 (+10-15%) 50 Hz
Weight, kg 3.9

2.4 Component Arrangement

PLANAR-SG3000 Headend consists of B20 base unit and plug-in modules. B20 base unit is a frame which integrates the power supply and the output splitter. Other headend elements can be used (plugged in) depending on the channel plan.



We recommend you to purchase the following accessories along with PLANAR-SG3000 Headend:
*- **RS-232-SG24 Port**. Allows programming, controlling and updating PLANAR-SG3000 firmware from the computer;*
*- **PS-24 Programmer**. Used for high-speed programming and control of PLANAR-SG3000.*

2.5. Options and Accessories

1. B20 Base unit ..... 1 pc.
2. 1P Input splitter module ..... pcs.
3. 2P Input splitter module ..... pcs.
4. 4P Input splitter module ..... pcs.
5. 8P Input splitter module ..... pcs.
6. A1 Input amplifier submodule ..... pcs.
7. A2 Input amplifier submodule ..... pcs.
8. C1 Central processor module ..... pcs.

9. K1 Channel amplifier module.....pcs.
10. K2 Channel amplifier module.....pcs.
11. KC1 Converter module.....pcs.
12. KC2 Converter module.....pcs.
13.....pcs.
14.....pcs.

3. PLUG-IN MODULES

PLANAR-SG3000 Headend can have the following plug-in modules:

- channel modules;
- input splitter modules;
- input amplifier sub-modules;
- central processor module.

3.1. Channel Modules

1 to 20 channel modules can be integrated in the base unit.

3.1.1 K1, K2 Channel Amplifier Modules



Channel amplifier modules (hereinafter channel amplifiers) are used to amplify one VHF (K1) or UHF (K2) TV channel.

Channel amplifiers include input-to-intermediate frequency converter, two SAW filters, intermediate-to-output frequency converter, amplifier and AGC device.

Channel amplifiers have equal input and output frequency.

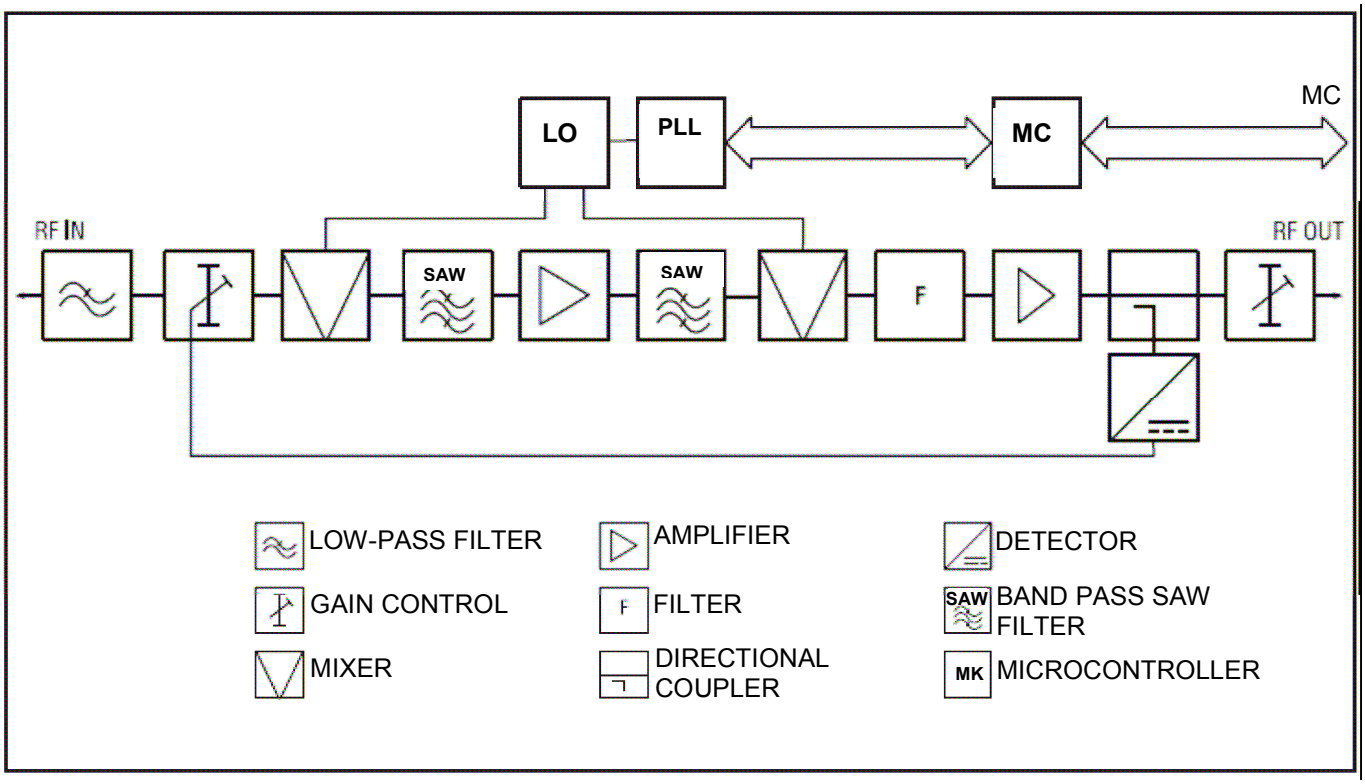

Figure 3.1 Block diagram of channel amplifier

Specifications

Type	K1	K2
Input frequency range, MHz	48-230 (1-12 ch)	470-862 (21-69 ch)
Nearest non-adjacent channels selectivity, dB, min	60	
In-band ripple, dB	2	
Gain, dB	35	
Video carrier frequency resolution, kHz	250	

3.1.2 KC1, KC2 Converter Modules



Converter modules (hereinafter converters) are used for conversion of receiving channel signal to distribution channel signal. Converters include input-to-intermediate frequency converter, two SAW filters, intermediate-to-output frequency converter, amplifier and AGC device.

WARNING! Converter modules consume more power than channel amplifier modules. Use no more than 5 converter modules in B20 base unit to protect power supply from overloading and to maintain headend thermal conditions. Make sure that power supply used in B20 base unit is labeled with CC sign (Converter compatible).

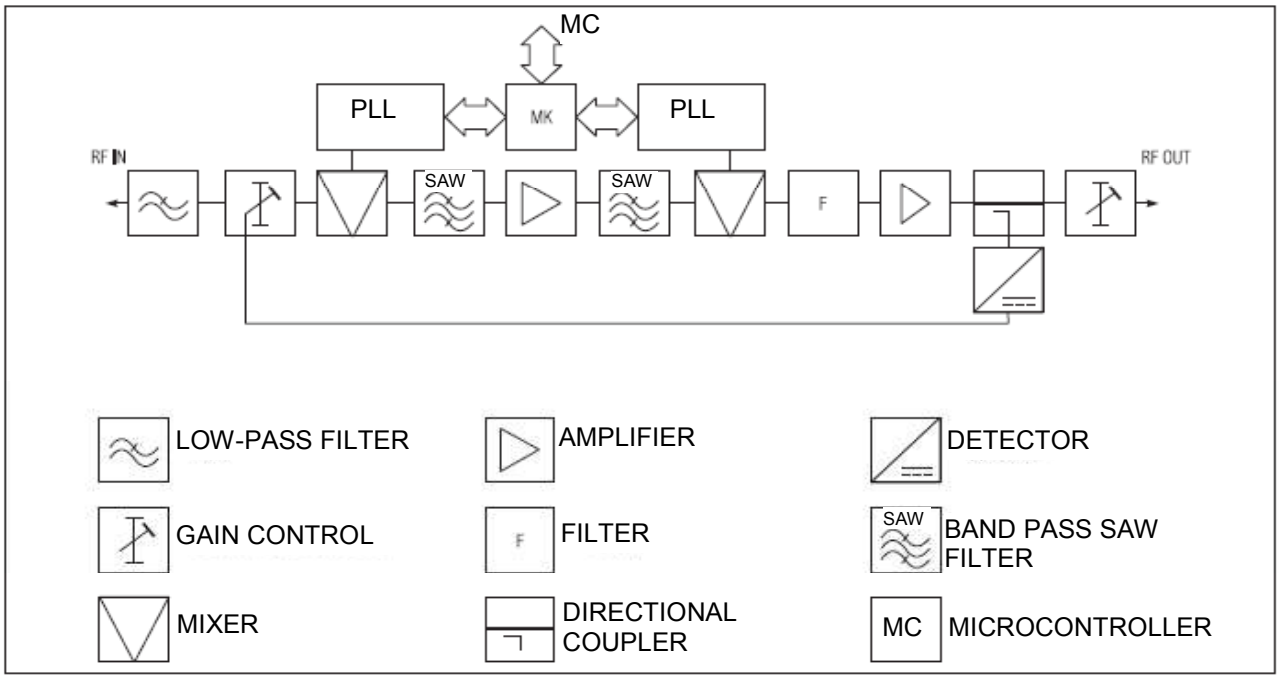

Figure 3.2 Block diagram of converter

Specifications

Type	KC1	KC2
Input frequency range, MHz	48-862 (1-69 ch)	
Output frequency range, MHz	48-470 (1 ch-S40)	470-862 (21-69 ch)
Nearest non-adjacent channels selectivity, dB, min	60	
In-band ripple, dB,	2	
Video carrier frequency resolution, kHz	250	

Warning! Do not use 1-5ch, S35-S40 and 60-69ch output channels.

3.2 1P, 2P, 4P, 8P Input Splitter Modules

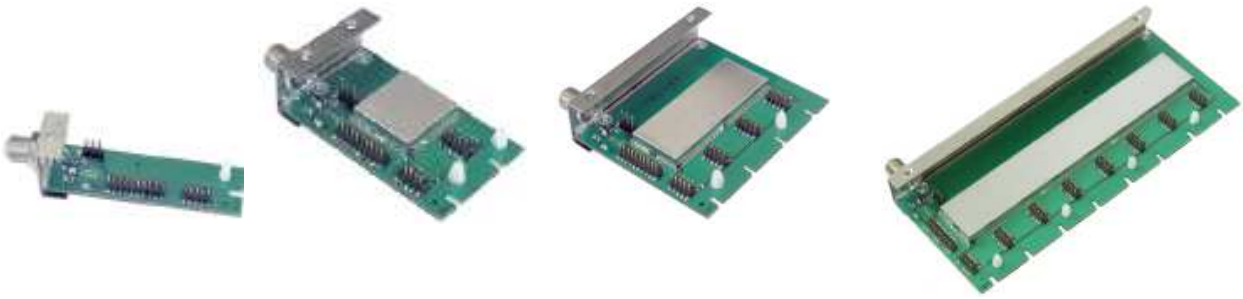

Input splitter modules (hereinafter splitters) are used to distribute input signal between 1, 2, 4 or 8 channel modules.

Each base module can have from 1 to 20 splitters, but the total number of splitter outputs must not exceed 20.

Each splitter must be equipped with input amplifier sub-module.

Specifications

Type	1P	2P	4P	8P
Number of outputs	1	2	4	8
Gain, dB (with A1/A2 sub-module)	3	3	3	1

3.3 A1, A2 Input Amplifier Sub-Module



Input amplifier modules (hereinafter input amplifiers) are used for input signal band amplification. The number of input amplifiers in the base unit must be the same as the number of splitters.

Specifications

Type	A1	A2
Input frequency range, MHz	48-230	470-862
Gain, dB	5	

3.4 C1 Central Processor Module



C1 Central processor module (hereinafter central processor) controls the process of headend setting and diagnostics. It is possible to operate PLANAR-SG3000 without the central processor (after its programming). This allows using one central processor to maintain several stations.

4. ASSEMBLY AND MOUNTING

4.1 General Information

⚠ **Warning!** Turn off the power supply before you start assembly operations.

To assemble PLANAR-SG3000 headend, follow the procedure below:

1) Unpack the headend and make sure there are no deformations or visible damage.
2) Place the base unit on a flat horizontal well-lit surface.
3) Unscrew 4 screws of the upper cover and remove the upper cover. Sectional view of headend left sidewall is shown in Figure 4.1.

⚠ *Headend left sidewall is a shorter wall of the base unit next to the power supply.*

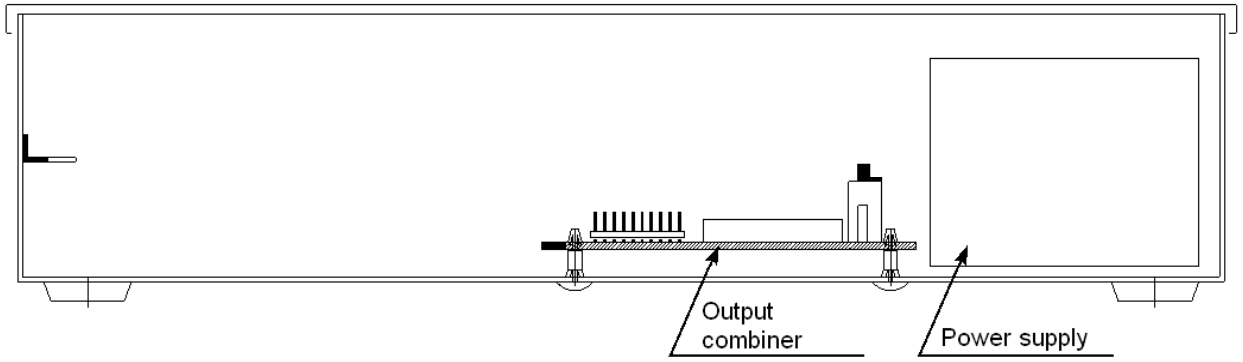

Figure 4.1

4.2 Mounting Splitters

Splitters can be set in the base unit at random, but it is more suitable to set them from left to right in the order of channel numbers increasing.

Remove retention screws from all splitters (see Figure 4.2). These screws can be later used for fixing splitters and input amplifiers.

When setting a splitter, the lower part of the plastic support has to go all way down to the round groove part, located at the bottom of the base unit. Then move the splitter so that the input F Connector entered a hole in the base unit wall (see Figure 4.3). Make sure that the plastic support has got caught with the groove.

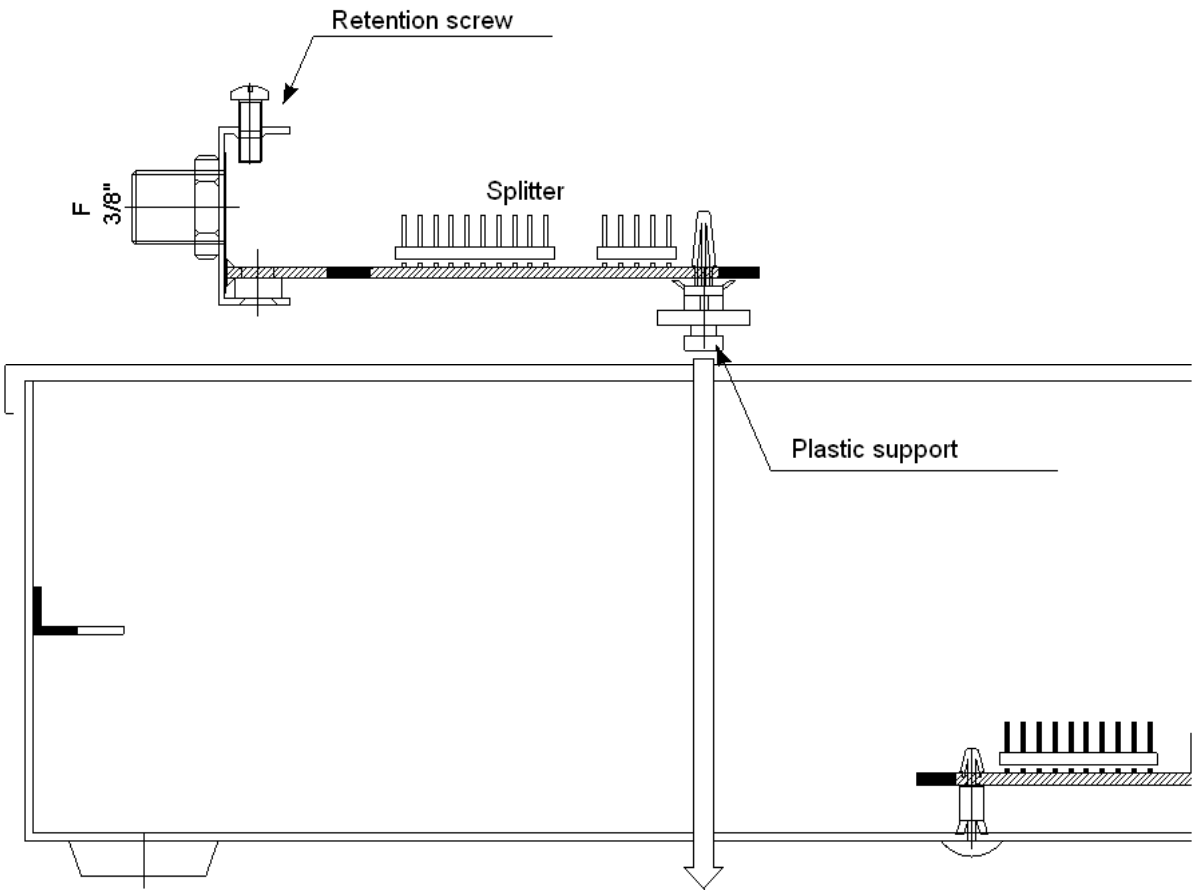

Figure 4.2

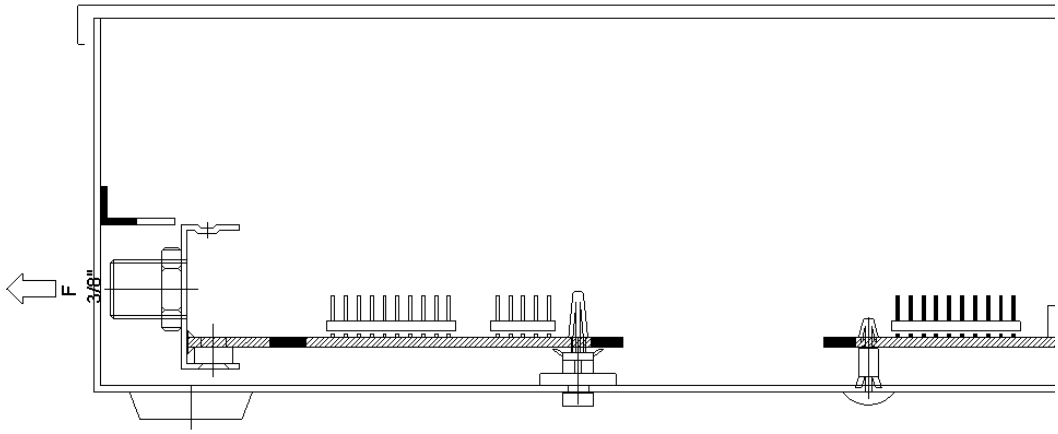

Figure 4.3

Similarly, set the other splitters, making sure that all plastic supports can freely move inside the grooves without jamming. The splitters can be finally secured by the retention screws (see Figure 4.2) after assembly of all channel modules and input amplifiers, because all splitters will then be placed properly.

Each splitter has to be completed with an input amplifier.

4.3 Mounting Channel Modules

Attention! *All channel modules of one splitter have to be within the same range. Input amplifier also has to be within the same range. If KC1 and KC2 converters are installed in to the splitter, the* ***input*** *converter channels have to be of the same range.* ***Output*** *converter channels can be of any range.*

It is advisable to install channel modules to 1P type of splitters first (if they are included into the delivery set).

Position the channel module properly (see Figure 4.4). A connector with lower number of pins has to face the input F connector, and positioning locks of the channel module have to fit positioning slots. Position the splitter properly by shifting it slightly until both channel module connectors fit their counterparts properly. Joint the connectors tightly. See properly mounted channel module in Figure 4.5.

Positioning locks (bosses of the channel module) do not allow improper mounting of channel modules on the assembled headend with fixed splitters. However, if the splitters are not fixed, be careful not to offset the channel module during setting. Improper channel module setting can cause damage to headend.

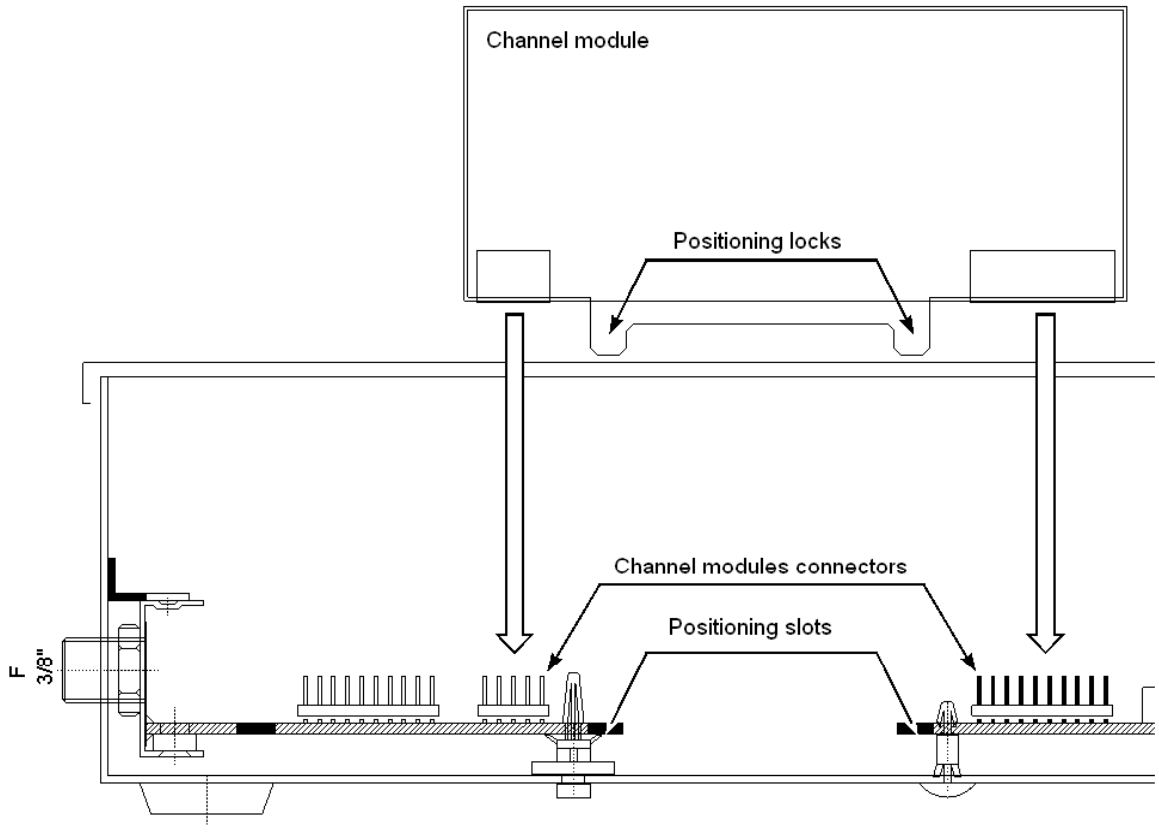

Figure 4.4

⚠ It is recommended to start with setting first and last modules for each splitter. In this case it will be easier to mount the other modules.

4.4 Mounting Input Amplifiers

Install input amplifiers into respective connectors on the splitters (see Figure 4.5).

⚠ ***Attention!*** *Input amplifier has to be within the same range as all channel modules installed in the splitter.*

The input amplifier is designed with a positioning lock in the form of a boss used for proper installation. When installing it has to lock into the positioning slot at the splitter board.

After its installation, the bracket on the input amplifier housing has to be on top of a mounting rail.

Input amplifier is finally fixed using the same retention screw shown in Figure 4.2. The procedure is described in the next section.

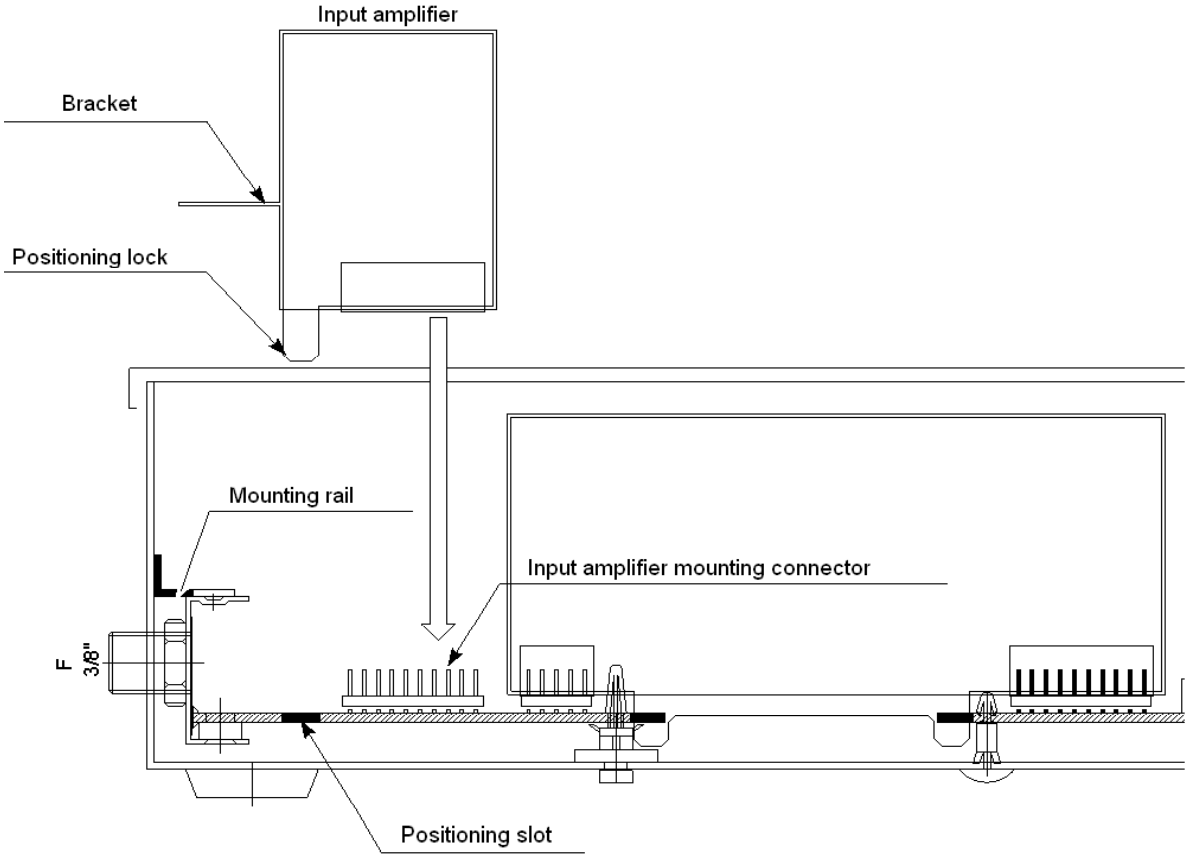

Figure 4.5

4.5. Fixing Modules

Screw in and tighten all retention screws hard.

Each splitter (except 1P) has to be fixed with two retention screws, one of which is used to fix input amplifier as well (see Figure 4.6). 1P splitter is fixed with one screw.

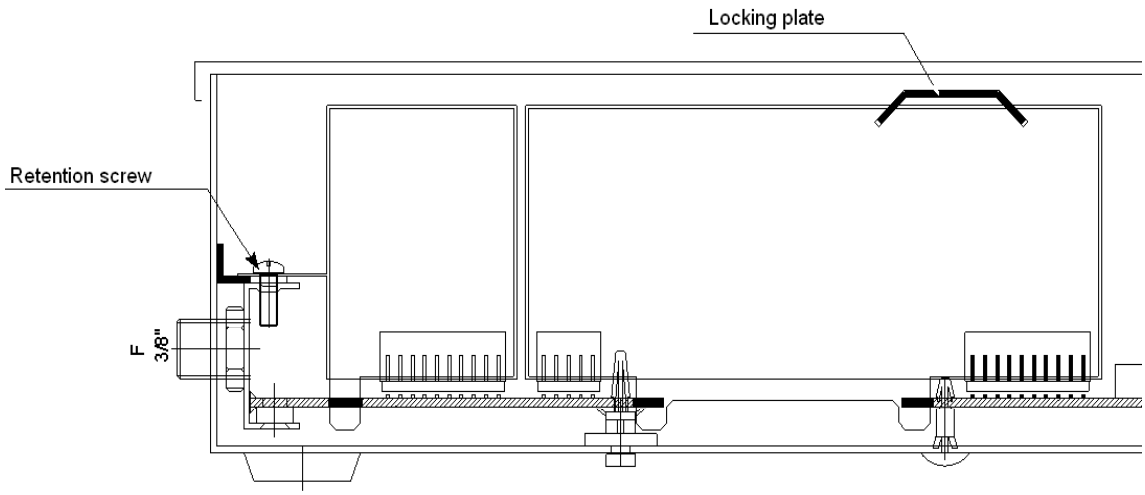

Figure 4.6

⚠ ***Attention!*** *Make sure that all retention screws are securely tightened. Loose screw or no screw at all can cause interference at the headend output.*

Set the locking plate so that each channel module was plugged inside the respective groove on the plate. Please be careful not to apply too much force when mounting the plate.

Side plate bosses have to enter the grooves on the side walls of the base unit.

⚠ *To make the plate mounting easier, slightly bend the base unit side walls.*

4.6 Mounting Central Processor

Central processor mounting connector is shown in Figure 4.7.

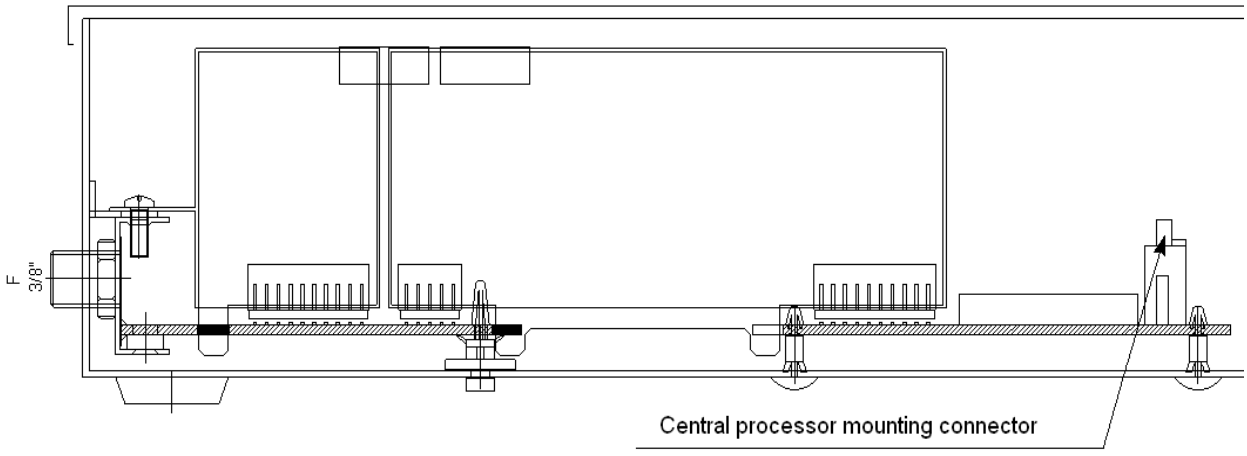

Figure 4.7

Plug the central processor into the connector. Central processor pins have to be below and the mounting elements have to be to the right as shown in Figure 4.7. Insert the central processor into the connector at an angle (see Figure 4.8, position 1) so that all central processor pins locked with the connector pins.

Apply slight force to push the central processor inside the connector against stop.

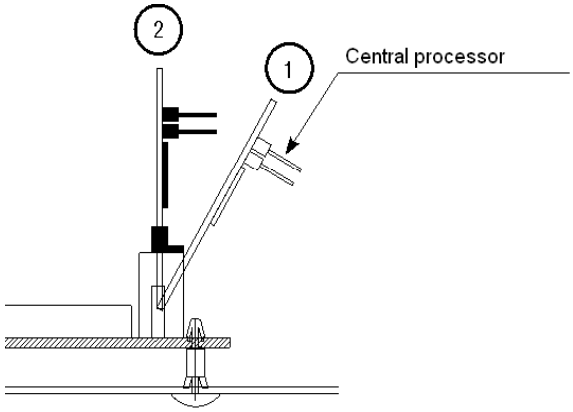

Figure 4.8

Slightly bend A and B side latches with both index fingers (see Figure 4.9).

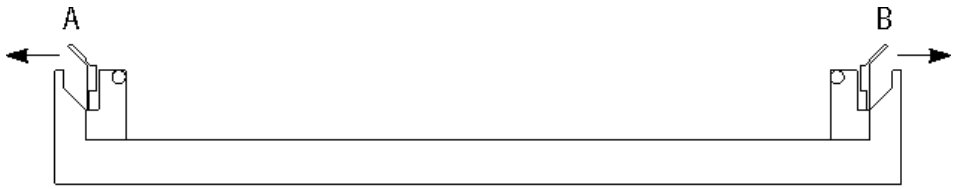

Figure 4.9

Mount the central processor into position 2 (see Figure 4.8). Release side latches to fix the central processor.

4.7 Disassembling Modules

4.7.1 Removing Channel Modules

Remove the locking plate (see Figure 4.6) by slightly bending the side walls of the base unit. Carefully remove the plate, do not apply too much force. Pull the module up (see Figure 4.6) to separate the connectors. Pull the module straight up by applying little force to the middle part of the unit.

4.7.2 Removing Input Amplifiers

Unscrew the retention screw.

⚠ ***Attention!*** *Be careful not to drop the screw inside the headend!*

Carefully pull the input amplifier up to separate the connectors.

4.7.3 Removing Splitters

Remove all channel modules set on the splitter which has to be disassembled (see section 4.9). Remove input amplifier mounted on the splitter (see section 4.7.2). While moving the splitter to the right (see Figure 4.3), unlock the plastic support from the base unit groove.

⚠ *When dismounting is completed, reinstall the locking plate.*

4.7.4 Removing Central Processor

Central processor can be removed in the order which is reverse to its mounting procedure (see section 4.6).

4.8 Headend Installation

The headend has to be mounted vertically on a flat surface allowing for free cooling air access. Make sure that input connectors are at the top and the output connectors are at the bottom. Install the headend away from direct sun to avoid its heating. Do not operate the headend in horizontal position to avoid overheating.

⚠ ***Attention!*** *If you wish to install the headend inside a cabinet, make sure it is properly ventilated. The cabinet must have air holes in the upper and bottom part. You might also need to use artificial ventilation in some cases.*

To install the PLANAR-SG3000 headend on site, follow the procedure below:

- Secure the headend housing on a vertical surface using two screws or self-tapping screws via two holes in the upper part of the base unit. For easier access to these holes remove first and last channel modules and set them after the headend is fixed.
- Ground the housing by connecting terminal ⏚ to safety ground bus.
- Connect and secure all cables to the headend (antenna and power cables). A respective channel antenna cable has to be wired to each headend input.

5. START-UP

5.1 General Information

To prepare your PLARNAR-SG3000 for operation in stand-alone mode, proceed as follows:

1. Set all attenuators of input amplifiers and channel modules to minimal signal attenuation (indicator shifted clockwise all the way down).
2. Connect the TV level meter to each antenna cable one by one and measure signal level for each channel. The signal level must be within 75-90 dBµV for proper operation of AGC system and optimal carrier to noise ratio. If the signal level is below the required value, you might need to use antenna amplifier. If the signal level exceeds the required value, use an external attenuator or an input amplifier attenuator to reduce it.
3. Hook up all connectors to the headend and turn the power on.
4. Set the channel modules to required frequency values or channels. The procedure is described in the **Programming** section (see section 6).
5. Check the input levels for all channels. The procedure is described in the **Programming** section (see section 6.2.4). Adjust attenuator settings for input amplifiers. Optimal attenuator position is all the way down clockwise, however make sure that there is no overloading at the highest power channels.
6. Check the headend output level. The dispersion of channels output levels must be within ±2 dB. If necessary, use the attenuators for precise adjustment in channel modules
7. Make sure that NORMAL/ALARM indicator color is green. It shows that all modules function properly.

⚠ *If NORMAL/ALARM indicator changes its color to red, it means that there is a failure in the channel modules. Connect **PS-24 Programmer** (or computer via **RS232-SG24 adapter**) and read error message in the **INSTALLED MODULES** menu item.*

8. Close the headend top cover and tighten 4 screws.

⚠ *It is recommended that the signal level indicated at all channels is 7 or 8. You shall also attenuate the VHF channels output level by 3-8 dB.*

5.1.1 Receiving Low Level Signals

PLANAR-SG3000 headend has a feature of controlling the input mixer operation mode at each channel module. It is controlled by means of presetting the value of operating current. When the operating current value iincreases, the channel module response and overload capacity are also increasing. At the same time power consumption also becomes higher. To receive high-level signals it is recommended to set minimal operating current value. If the signal is weak or disturbed you need to select optimum operating current value by visually checking signal quality of this channel.

⚠ *For converter modules operating current is preset for both input and output mixers. Generally it is sufficient to set output mixer current to minimum (1).*

Do not set higher current value if it is not necessary. Increasing power consumption affects the headend thermal conditions.

When you receive high-quality signals at all channels, it is recommended to set minimal possible operating current at each channel module while visually controlling signal quality at all channels.

5.1.2 Connecting Injectors for Powering Antenna Amplifiers

To connect power injector located at each splitter, set the jumper to ON (see Figure 5.1). Injector power indicator will turn on.

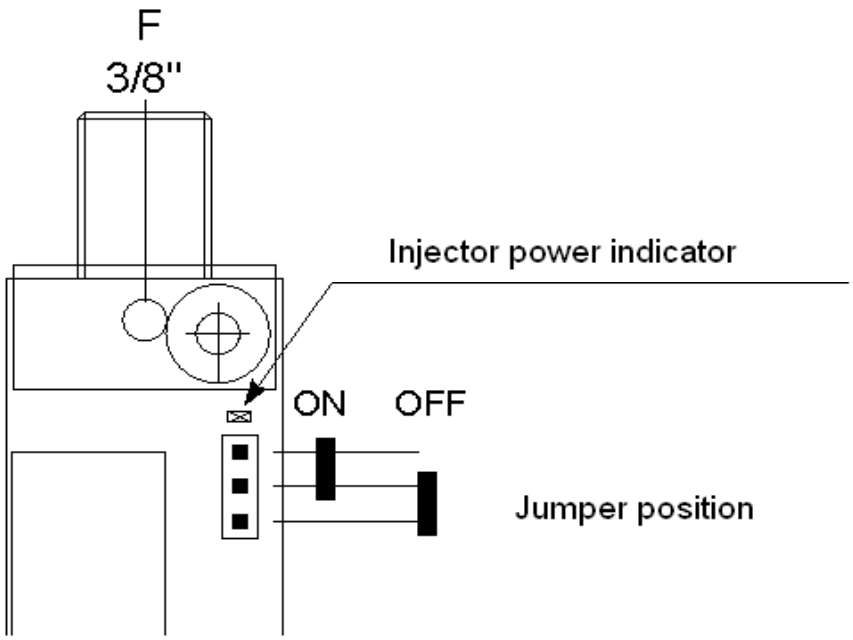

Figure 5.1

⚠ *Make sure that jumpers for the splitters, which do not require injectors, were in OFF position.*

6. PROGRAMMING

Use the **CONTROL** connector to connect PS-24 Programmer or computer via RS232-SG24 adapter (if you use the computer, make sure that it conforms to requirements stated in RS232-SG24 Adapter Data Sheet).

⚠ *When you press the Programmer keys, the information can be displayed with a delay. Make sure you follow the information on the screen.*

6.1 Programmer Controls

The keys on the programmer keypad have the following functions:

ENTER – enter the selected menu item;

↑ and ↓ – moving up and down the menu;
– increasing or reducing parameter in the editing mode;

← and → – cursor control; increasing or reducing index number of channel module;

* – back to previous item.

6.2. Main Menu Items

6.2.1. Headend Title

```
SG3000
HEADEND
```

Press **ENTER** to view headend firmware version:

```
Vers. : 0.1.1
Firmw.:1.0.1.2
```

Press * to return to main menu.

6.2.2. Installed Modules



This menu item gives information on the modules installed in the headend. A relevant message will appear when you set new modules or remove the installed modules (see section *6.3 Viewing Modules Info*).

6.2.3. Modules Control



This menu item allows measuring and saving the module settings and includes factory settings editor (if the access password is entered).

Use **ENTER** key to start modules control program (see section *6.5 Modules Control*).

6.2.4. Level Check



This menu item allows checking the signal input levels. Use **ENTER** key to view the input level values (see section *6.6 Level Check*).

6.2.5. Saving Configuration

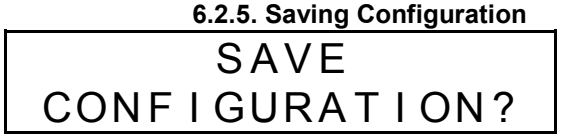

This menu item allows saving the current configuration to nonvolatile memory. It saves configuration of the central processor module, as well as of channel modules internal memory. Use **ENTER** key to perform saving. Saving is accompanied with **Saving...** message:

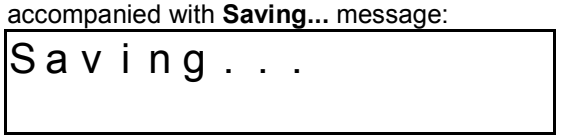

When saving is completed, the device will return to *Headend Title* menu section:



6.3 Viewing Modules Info

Go to **Installed Modules** menu section:



Use **ENTER** key to view information about modules:

```
 1>+--++++---<10
11>+++++-----<20
```

+ – module set
– – module not set

The first line displays information on modules with module numbers from 1 to 10.

The second line displays information on modules with module numbers from 11 to 20.

Use [*] key to go back to main menu.

6.4. Changing Headend Configuration

Make sure to ***turn the power off*** when changing headend configuration.

If the configuration was changed, it will be detected by the central processor during the following start. In this case the *Installed Modules* menu item will not be displayed, information on changes will be displayed instead, for example:

```
Not found
Module<06>  K2
```

To view information on other changes (if any), use [←] and [→] keys:

```
New module found
Module<10>  K2
```

Use **ENTER** key to view the summary of all changes:

```
 1>+--++?+--!<10
11>+++++-----<20
```

+ – module set;
– – module not set;
? – no module;
! – new module detected.

Use [*] key to go back to menu.

⚠ ***Attention!*** *Make sure to save configuration before you connect new modules, remove installed modules or exchange modules (even modules of the same type).*

6.5. Modules Control

Go to **Modules Control** menu item:

```
MODULES
CONTROL
```

Use **ENTER** key to start.
The following message will be displayed while the device is searching for modules connected:

```
Searching...
```

When properly functioning modules are detected, a message will be displayed showing module parameters (parameters may be different for different module types).

Select the required module number using ← and → keys.

For example, the following message will be displayed for K2 module type with number 01:

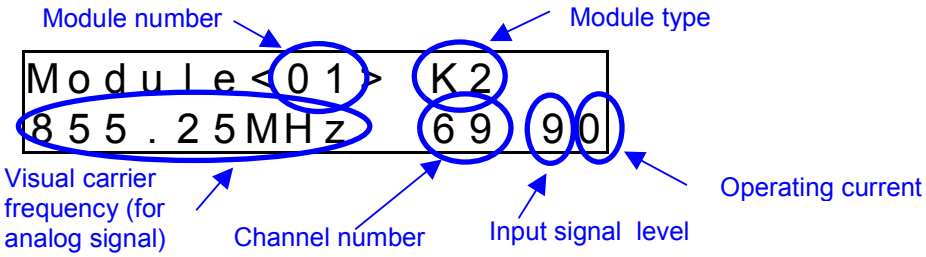

Use **ENTER** to edit module parameters.

It is not possible to switch between modules during editing, port number <01> symbols are replaced by [01] symbols , and a cursor will appear at the first frequency digit.

```
Module[01] K2
855.25MH   69 90
```

Use * key to exit editing mode.

6.5.1 Editing Frequency

Enter the module editing mode. The cursor has to be on the first frequency digit.

You can edit the frequency using the following keys: ↑ – increase frequency and ↓ – reduce frequency. Frequency resolution is 250 kHz.

If you hold down the ↑ and ↓ keys, the frequency value will change at higher speed. Press **ENTER** when the required frequency value is selected. The selected frequency value will then be saved to nonvolatile memory.

Frequency value can be entered directly by using the numeric keys of the keypad.

When you enter the number, you have to enter all digits including decimal.

You can cancel the entered numbers by pressing ←.

6.5.2 Editing Channel Number

Enter the module editing mode. The cursor has to be on first frequency digit.

Press [→]. The cursor will move to the first channel number digit. You can edit channel number using the following keys: [↑] – increase channel number and [↓] – reduce channel number.

If you hold down [↑] and [↓] keys, the channel number will change at higher speed. Press **ENTER** when the required value is set. The selected channel number value will then be saved to nonvolatile memory.

Press [←] to return to frequency editing field.

⚠ ***Attention!*** *The device will automatically exit the programming mode if you do not press any key within 30 seconds. When this happens the cursor disappears. If you do not press **ENTER** key (saving to nonvolatile memory) after editing, then the previous value saved in the memory will be restored after you exit the editing mode. To continue editing press **ENTER**.*

6.5.3 Editing Value of Operating Current

Enter the module editing mode. The cursor has to be on the first frequency digit.

Double click the [→] key. The cursor will move to a digit indicating the value of operating current.

```
Module[01]  K2
855.25MHz   69  94
```

The operating current range is from 1 to 8.

You can edit the operating current value using the following keys: [↑] – increase operating current and [↓] – reduce operating current.
If you hold down [↑] and [↓] keys, the operating current value will change at higher speed. Press **ENTER** when the required value is set. The selected operating current value will then be saved to nonvolatile memory.

Press [←] to return to channel number editing field.

6.6. Level Check

Go to **Level Check** menu item:

```
     LEVEL
     CHECK
```

Use **ENTER** key to view the input levels:

```
 1>9--87-5---<10
11>89767-----<20
```

The range of the input signal level is 0 to 9.

0-1	– no signal;
1-6	– low signal level;
7	– normal signal level;
8	– signal level close to max permitted value;
9	– signal level exceeds max permitted value.

Use [*] key to return to the main menu.

7. UPDATING FIRMWARE

You can update the firmware integrated into PLANAR-SG3000 Headend (HE). It is possible to update firmware for HE with versions 1.0.1.1 and higher.

⚠ *Each HE firmware version has a unique number, for example 1.0.1.1. firmware version is displayed on the programmer screen after HE is turned on (item 10.2).*

Planar continuously works on HE updating and develops new firmware versions introducing new options. Firmware versions can be downloaded from Planar web-site www.planar.chel.ru next to SG3000 Headend description. To update the firmware, proceed as follows:

a) Connect the PC serial port to the **CONTROL** connector via RS232-SG24 adapter (it is not included in the delivery set, and have to be purchased additionally);

b) Create a new folder, for example **SGUpdate**, on the computer. Copy **SoftLoader** program from Planar web-site. The loader program can be run at the computer with Windows98, Windows2000 or WindowsXP operating system. **SoftLoader** will communicate with HE and download new firmware to it;

c) Copy a new HE firmware version from the web-site (***.bsk*** file with a version number, for example **1_0_0_9.bsk**) and a file with new version description (**.doc** file with firmware version number) to **SGUpdate** folder;

d) Start **SoftLoader** program on the computer. Select PC serial port to which HE is connected by left clicking in the firmware field, shown by the arrow in Figure 7.1;



Figure 7.1. Selecting serial port

e) Select the file with new firmware version. Make a left click on the firmware key, shown in Figure 7.2. A usual Windows dialog box for file selecting will appear, select the required file there and click **OK**.

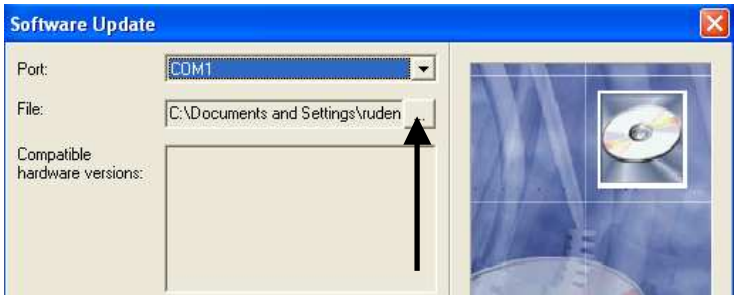

Figure 7.2. File opening

f) Press **START** key. Then follow the program instructions.

Computer will display the message to turn HE power off and check cable connection between HE and computer serial port. Then another message box with instructions will appear. Follow its instructions.

If HE functions properly, COM port cable is properly connected, computer serial port is correct and firmware version is compatible with HE hardware version, then the program will be loaded to HE. When loading is complete, a message confirming that loading is successfully completed will be displayed.

⚠ **Warning!** Do not interrupt program loading to PLANAR-SG3000 Headend. This can cause HE malfunction. In case program upload was interrupted, please update the program once more.

8. MAINTENANCE

Required PLANAR-SG3000 Headend maintenance is limited to preventive inspections and regular headend functional check.

It is recommended to perform preventive and regular functional check once a year.

The preventive check procedure is as follows:

- turn the power off;
- remove the dust from the housing using compressed air;
- check the connectors for damages; replace if any mechanical damage or corrosion is detected.

Technical and functional headend check is performed within CATV and cable TV systems. Check the signal level at output test jack as follows:

- connect the selective voltmeter (level indicator) to the output test jack and measure video carrier level of signals transmitted;
- in case the measured levels do not agree will CATV and cable TV systems data, please adjust the headend as described in Section 6.6 of the Manual.

9. STORAGE AND TRANSPORTATION

Store the headend in the transport package at the storage facility preventing the headend from environmental exposure. Make sure it is not exposed to fumes of acid, alkali and other aggressive media.

Ambient storage temperature must be within -50 °C to +50 °C.

The headend can be transported only in transport package by any transport means at the temperature of -50 °C to +50 °C.

10. WARRANTY

The manufacturer guarantees that the headend conforms to the Manual requirements in case the user complies with the mounting, operation, transportation and storage instructions stated in this Manual.

Guaranteed service life is 24 months from the date of purchase specified in this Manual.

Guaranteed shelf life is 3 years from the date of manufacture.

Manufacturer guarantees headend repair and replacement of its components within the warranty period free of charge, if the headend fails or its performance becomes below normal as stated in the Manual.

Headend will be repaired or replaced free of charge provided that the user complies with the mounting, commissioning, operation, transportation and storage instructions upon presentation of this Manual with a purchase mark.

The warranty shall not be valid if:

- failure is due to user's negligence or non-compliance with the Manual instructions;
- in case of unauthorized modules opening.